661 Prima/Cyan Hinged Door 762

EX661–10

The codes here refer to the silver model. To ensure correct replacement parts are sent be ready to quote:

- The six digit part code from this drawing eg 304781
- The frame finish eg silver
- The unit size eg 762

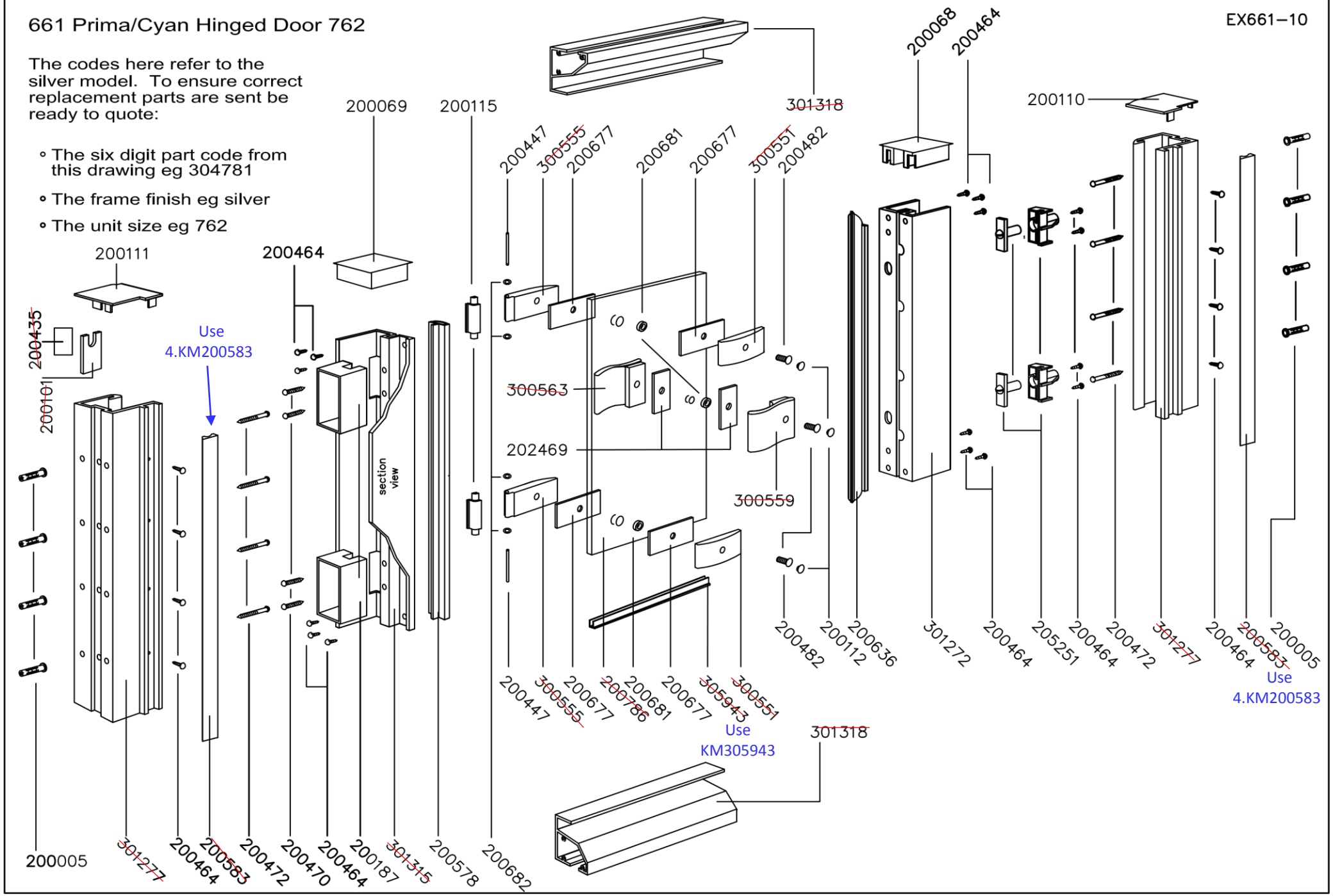

FINAL STOCK

* = No more can be supplied once stock is depleted

RED LINE
Indicates
NO LONGER AVAILABLE

Blue Text
Indicates
USE THIS NEW NUMBER